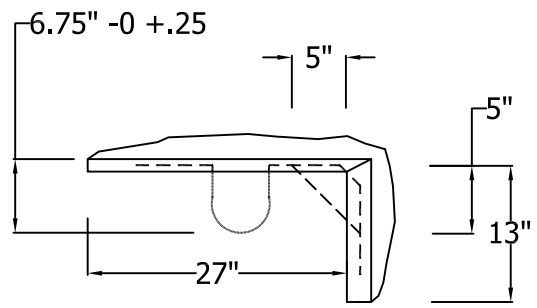

TOP VIEW
LEFT OUSIDE CORNER

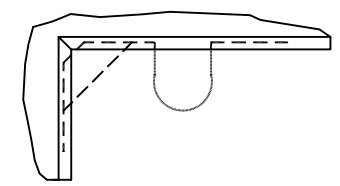

TOP VIEW
RIGHT OUTSIDE CORNER

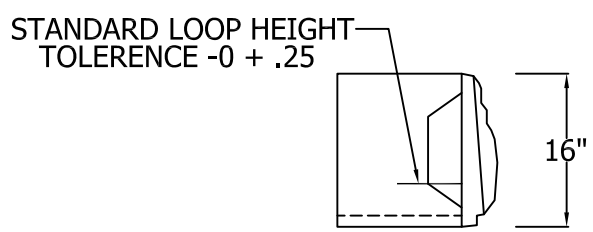

SIDE VIEW

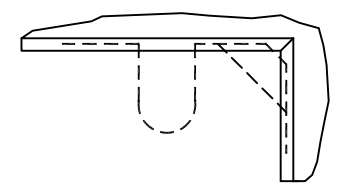

TOP VIEW
LEFT OUTSIDE CORNER

NOTE:
1) MINIMUM CONCRETE COMPRESSIVE STRENGTH
5500psi AT 28 DAYS
2) 6% AIR ENTRAINMENT
3) 3 LBS STRUCTURAL FIBER PER CUBIC YARD

REV #	DESCRIPTION	DATE

LOCK+LOAD™
RETAINING WALL SYSTEMS
1681 CHESTNUT STREET, SUITE 400, VANCOUVER, B.C. V6J 4M6
Tel:(604) 732-9990 Toll Free: 1-877-901-9998 Fax: (604) 737-1140
Web site: www.lock-load.com

DRAWING NAME	OUTSIDE CORNER
PROJECT NAME	TYPICAL DETAILS
LOCATION	
CITY	COUNTRY
DRAWN BY	DATE 01/06/12
APPROVED BY	PREPARED FOR
SCALE N.T.S.	
OUR PROJECT NUMBER CUSTOMER DRAWING	OUR DRAWING NUMBER OUTSIDE-CORNER